VUE A

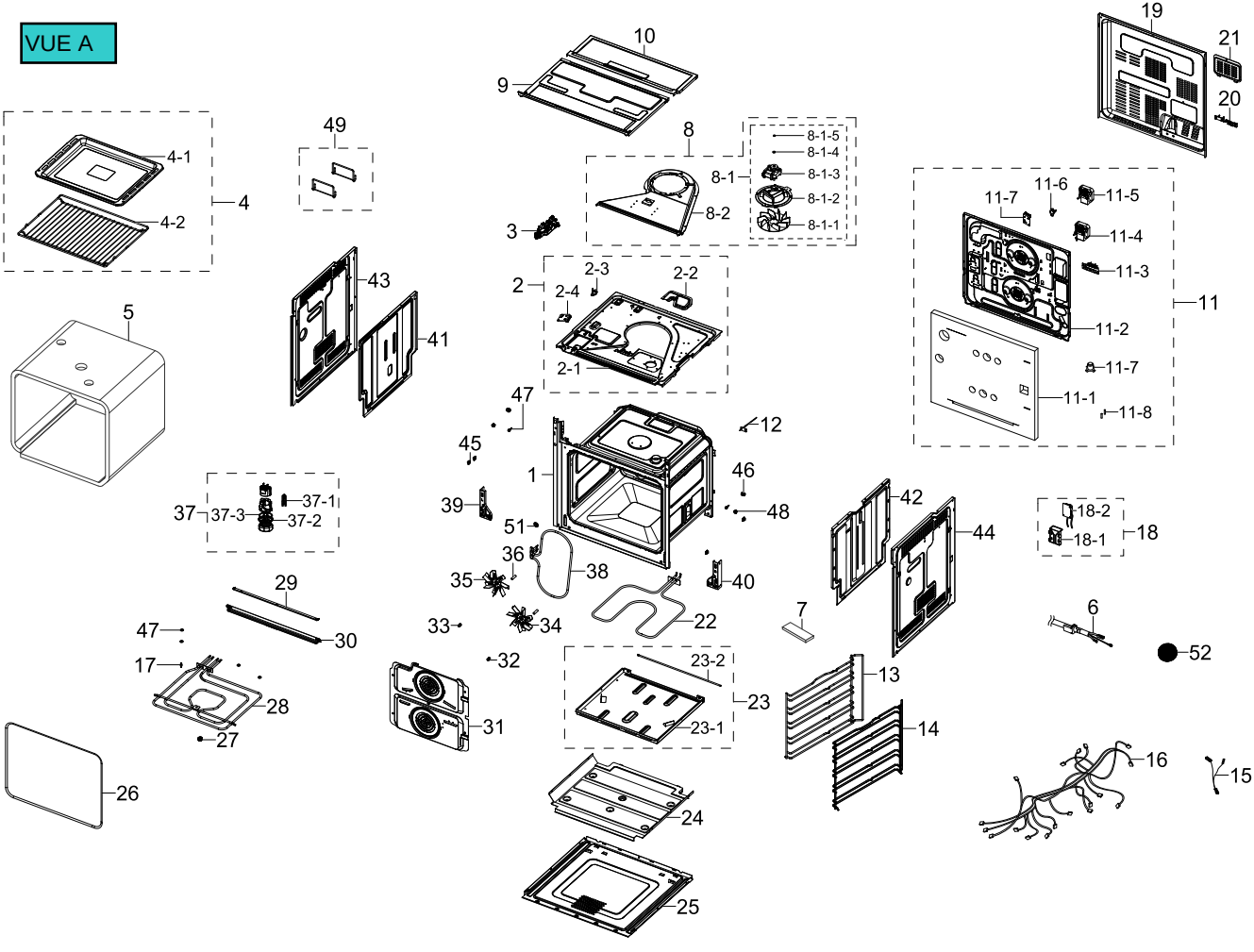
10
9
19
21
20
49
4-1
4-2
4
8
8-1-5
8-1-4
8-1-3
8-1-2
8-1-1
8-1
8-2
3
11-6
11-7
11-5
11-4
11-3
11
11-2
11-7
11-1
11-8
43
41
5
2
2-3
2-2
2-4
2-1
47
12
45
1
46
39
48
51
42
44
18-2
18-1
18
37
37-3
37-1
37-2
36
35
38
40
29
30
47
33
34
22
7
6
52
17
32
23-2
13
28
27
31
23
23-1
14
16
15
26
24
25

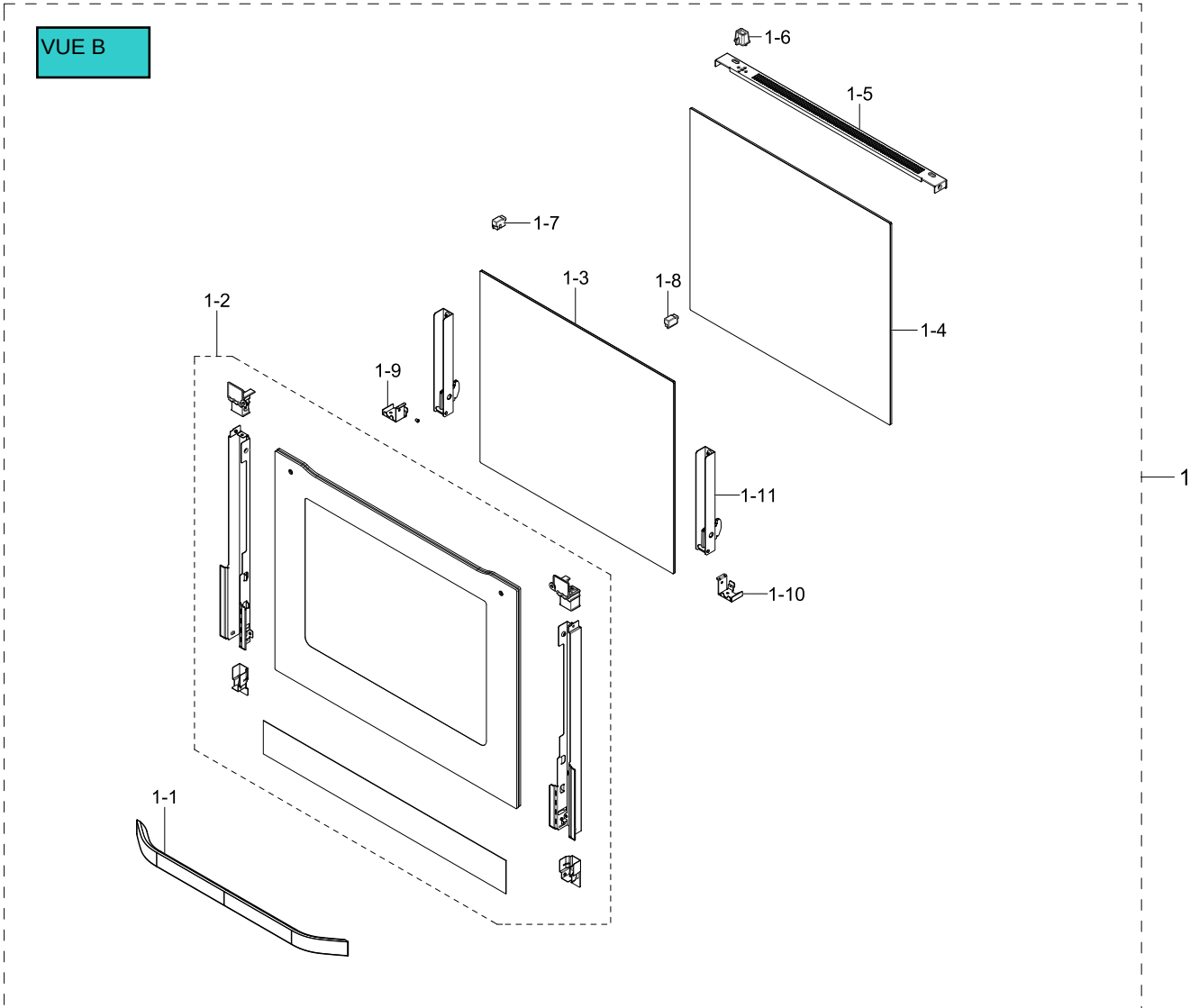
VUE B
1-6
1-5
1-7
1-3
1-8
1-2
1-4
1-9
1-11
1
1-10
1-1
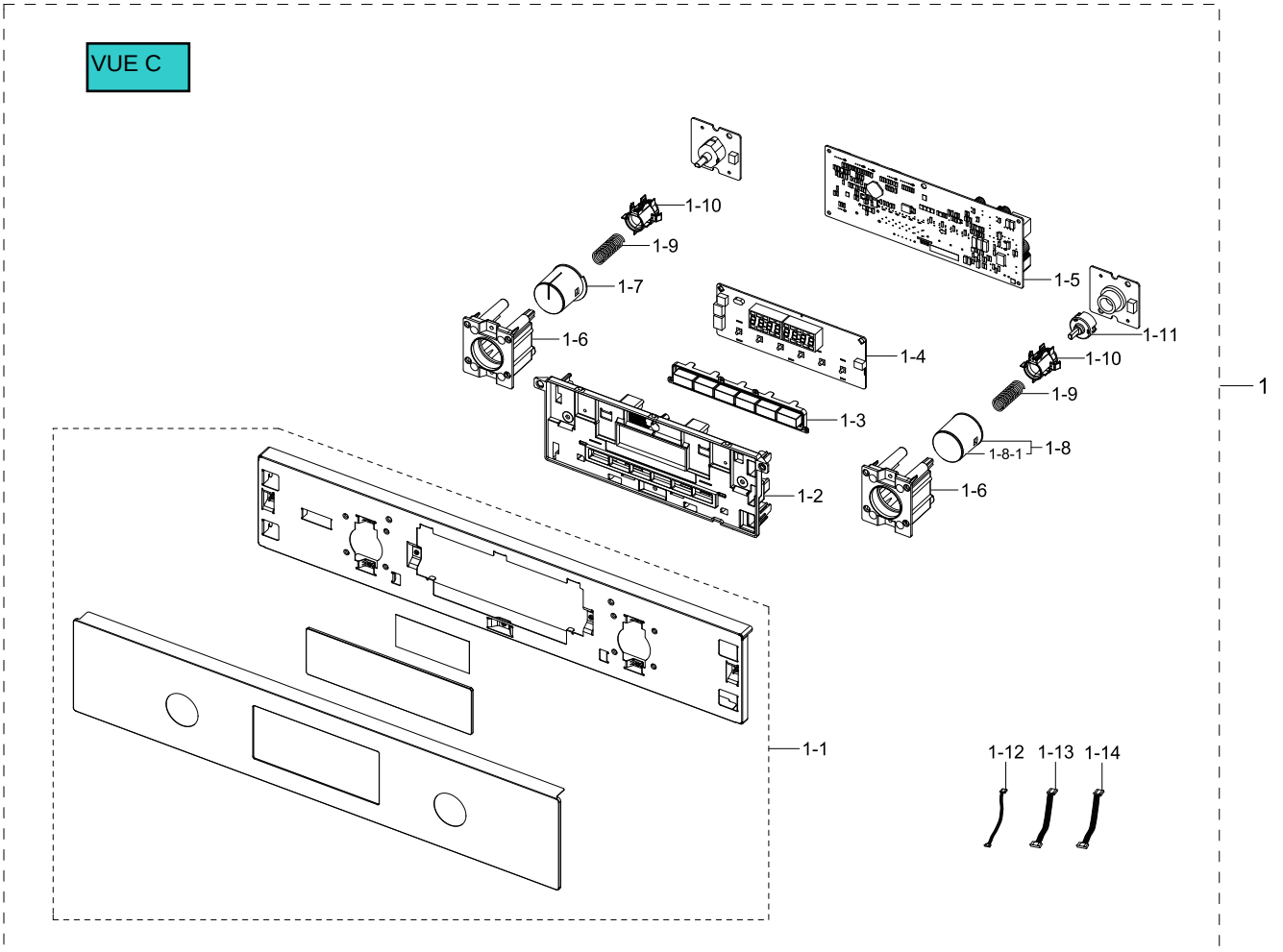
VUE C